2.7V / 50F XP™ Cell	DATA SHEET	Part Number:	ESHSR-0050C0-002R7UC

FEATURES

- » **The XP™ product line establishes a new market standard for enhanced performance under adverse environmental conditions**
- » **Patent pending improvements both in structure and in sealing**
- » **Compliant with RoHS, UL, and REACH requirements**
- » **Recommended Applications:**
  - **Actuators, Automotive, Emergency Lighting, Advanced Metering**
  - **Smoke Detectors, Telematics, Backup Systems, etc.**

Image is not to scale

ELECTRICAL SPECIFICATIONS		
Rated Voltage, V_R		**2.7 VDC**
Surge Voltage[1]		2.85 VDC
Rated Capacitance, C[2]		**50 F**
Capacitance Tolerance	Max.	-10% / +20%
	Avg.[4]	+5% / +10%
Initial DC-ESR, R_{DC}[3]	Max.	16 mΩ
	Avg.[4]	10 mΩ
Maximum Leakage Current[5]		0.073 mA
Maximum Peak Current, Non-repetitive[6]		37 A
Maximum Stored Energy, E_{max}[7]		50.6 mWh
Gravimetric Specific Energy[7]		4.4 Wh/kg
Usable Specific Power[7]		4.8 kW/kg
Impedance Match Specific Power[7]		10.0 kW/kg

TEMPERATURE SPECIFICATIONS	
Operating Temperature Range	-40 ~ 65°C (ΔCAP < 5% and ΔESR < 100% of initial values measured at 25°C)
Storage Temperature Range	-40 ~ 70°C (stored fully discharged)

TYPICAL LIFETIME CHARATERISTICS	
High Temp. Endurance (at V_R and 65°C)[8]	1,500 hours
Projected Room Temp. DC Life (at V_R and 25°C)[8]	10 years
Biased Humidity Test (at V_R, 60°C, and 90% RH)	3,000 hours (Electrical characteristics not considered)
Cycle Life (at 25°C)	500,000 cycles (Cycled from V_R to $1/2V_R$ using 100mA/F constant current with 10 second rest between charge and discharge steps)
Shelf Life	4 years (Stored fully discharged at under 25°C and under 40% RH)

TYPICAL THERMAL CHARACTERISTICS	
Thermal Resistance, R_{th} (Housing)	25 °C/W
Thermal Capacitance, C_{th}	11 J/°C
Usable Continuous Current (ΔT = 15°C)[9]	6 A
Usable Continuous Current (ΔT = 40°C)[9]	10 A

Copyright © 2016 Nesscap Co., Ltd. All Rights Reserved

SAFETY & ENVIRONMENTAL	
RoHS	Compliant
REACH	Compliant
UL	Compliant

DRAWING

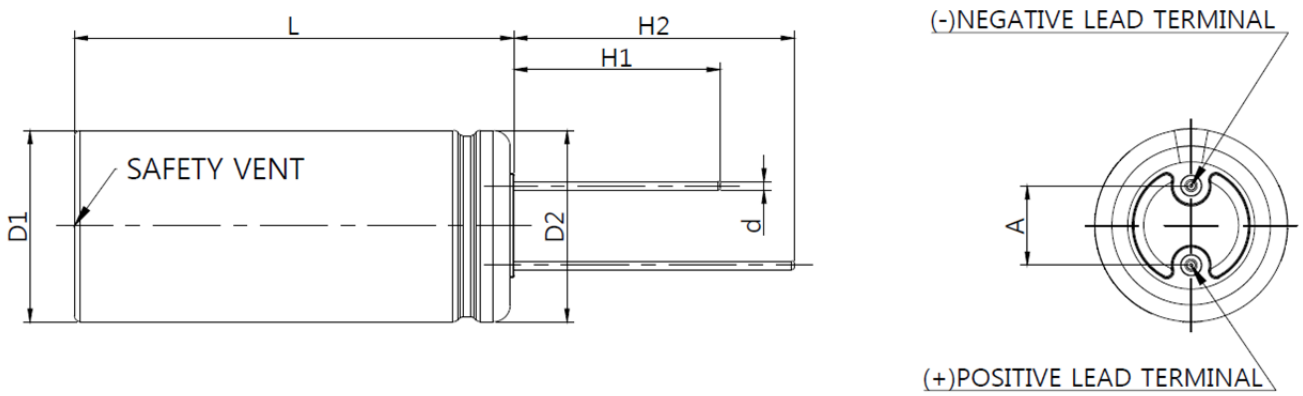

See Note on Mounting[10]

DIMENSION & WEIGHT	
D1 (+0.3)	18.0 mm
D2 (+0.5)	18.0 mm
L (+2.0)	40.0 mm
H1 (±2.0)	20.0 mm
H2 (±2.0)	27.0 mm
d (±0.05)	0.8 mm
A (±0.5)	7.5 mm
Nominal Weight	11.3 g

Copyright © 2016 Nesscap Co., Ltd. All Rights Reserved

NOTE

1. Surge Voltage

> Absolute maximum voltage, non-repetitive. The duration must not exceed 1 second.

2. Rated Capacitance (Measurement Method)

> Constant current charge with 4CV [mA] to V_R.
e.g. In case of 50F cell, 4 x 50 x 2.7 = 540mA
> Constant voltage charge at V_R for 5min.
> Constant current discharge with 4CV [mA] to 0.4V.

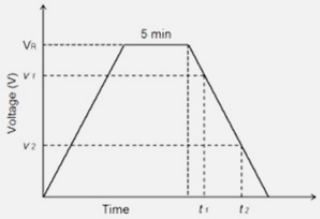

$$C = \frac{I \times (t_2 - t_1)}{v_1 - v_2}$$

where C is the capacitance (F);
I is the absolute value of the discharge current (A);
v_1 is the measurement starting voltage, 0.8 x V_R (V);
v_2 is the measurement end voltage, 0.4 x V_R (V);
t_1 is the time from discharge start to reach v_1 (s);
t_2 is the time from discharge start to reach v_2 (s)

3. DC-ESR (DOE Measurement Method)

> Constant current charge with 4CV [mA] to V_R.
> Constant voltage charge at V_R for 5min.
> Constant current discharge with 40CV [mA] to 2.5V.
e.g. In case of 50F cell, 40 x 50 x 2.7 = 5,400mA

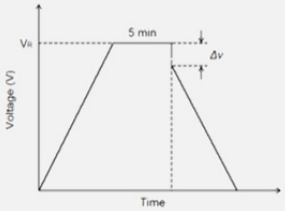

$$ESR_{DC} = \frac{\Delta v}{I}$$

where ESR_{DC} is the DC-ESR (Ω);
Δv is the voltage drop during first 10ms of discharge (V);
I is the absolute value of the discharge current (A)

4. Average

> Typical value or percentage spread that may be present in one shipment

5. Maximum Leakage Current (Measurement Method)

> The capacitor is charged to the rated voltage at 25°C.
> Leakage current is the current after 72 hours that is required to keep the capacitor charged at the rated voltage.

6. Maximum Peak Current

> Current that can be used for 1-second discharging from the rated voltage to the half rated voltage under the constant current discharging mode

$$I = \frac{½V_R}{\Delta t / C + ESR_{DC}}$$

where I is the maximum peak current (A);
V_R is the rated voltage (V);
Δt is the discharge time (sec); Δt = 1 sec in this case;
C is the rated capacitance (F);
ESR_{DC} is the maximum DC-ESR (Ω)

> The stated maximum peak current should **not** be used in normal operation and is only provided as a reference value.

7. Energy & Power (IEC 62391-2)

> Maximum Stored Energy, E_{max} (Wh) = $\frac{½CV_R^2}{3600}$

> Gravimetric Specific Energy (Wh/kg) = $\frac{E_{Max}}{Weight}$

> Usable Specific Power (W/kg) = $\frac{0.12V_R^2}{ESR_{DC} \times Weight}$

> Impedance Match Specific Power (W/kg) = $\frac{0.25V_R^2}{ESR_{DC} \times Weight}$

8. High Temp. Endurance and Room Temperature DC Life

> Test Conditions:
- Temperature: 65 ± 2°C, 25 ± 2°C
- Applied Voltage: V_R ± 0.02V

> End-of-Life Conditions:
- Capacitance: -30% from the rated minimum value
- DC-ESR: +100% from the rated maximum value

> Capacitance and ESR measurements are taken at 25°C

9. Maximum Continuous Current

> Current which can be used within the allowed temperature range under the constant current discharging mode

$$I = \sqrt{\frac{\Delta T}{R_{th} \times ESR_{DC}}}$$

where I is the maximum continuous current (A);
ΔT is the change in temperature (°C);
R_{th} is the thermal resistance (°C/W);
ESR_{DC} is the maximum DC-ESR (Ω)

10. Mounting Recommendations

> Provide properly spaced holes for mounting according to the cell dimension as to minimize leads being mechanically stressed.
> Do not place any copper patterns including the ground pattern or through-holes underneath the cell or on the underside of the PCB as the electrolyte inside the cell, if leaked, can corrode and short-circuit the patterns or damage other components nearby. Spacing of at least 1mm should be provided in between the footprint of the cell and the nearest copper pattern.
> Protective coating of components on the PCB is strongly recommended in order to reduce the risk of the components being damaged in an event of electrolyte leakage.
> The recommended mounting orientation is with the terminal leads pointing upward.
> Provide at least 2mm clearance from the safety vent and do not position anything near the safety vent that may be damaged by vent rupture.
> Place cells on the PCB taking into account that the cells may not be completely hermetic during its lifetime. Electrolyte vapor and gases generated during normal operation may escape the package.
> Soldering recommendations for small and medium size cells are available and can be found on www.nesscap.com under Support -> Download.

The contents of this document are subject to change without notice. The values presented are thought to be accurate at the time of writing. Nesscap does not guarantee that the values are always error-free, nor does Nesscap make any other representation or warranty regarding the accuracy or credibility of the information contained in this document. For more information, please reach us at one of following contacts.

Nesscap Energy Inc.	Nesscap Energy Inc.	Nesscap Co., Ltd.	Nesscap China	Nesscap Energy GmbH
Scotia Plaza 40 King Street West, Suite 5800 Toronto, Ontario, M5H 3S1	S24040 Camino Del Avion #A118, Monarch Beach, California, 92629	17, Dongtangiheung-ro 681beon-gil, Giheung-gu, Yongin-si, Gyeonggi-do (17102)	Room 1608-09, Anhui Building Chuangzhan Center, No.6007 Shennan Road, Futian District, Shenzhen City	Beerengarten 4 D-86938 Schondorf
CANADA	USA	REPUBLIC OF KOREA	CHINA	GERMANY

marketing@nesscap.com
info@nesscap-energy.de

Copyright © 2016 Nesscap Co., Ltd. All Rights Reserved