Datasheet - 2.7V / 10F Cell

POWERED TO MOVE

FEATURES

- » High performance product with low RC time constant
- » Long lifetimes with over 500,000 duty cycles
- » Rated capacitance of 10F
- » Compliant with RoHS and REACH requirements

** Image is not to scale*

SPECIFICATIONS

Electrical		ESHSR-0010C0-002R7
Rated Voltage (V_R) at 65°C		**2.7VDC**
Rated Voltage (V_R) at 85°C		2.3VDC
Surge Voltage[1]		2.85VDC
Rated Capacitance[2]		**10F**
Capacitance Tolerance	Max.	-10% / +20%
	Avg.[4]	-5% / +5%
DC-ESR[3]	Max.	30mΩ
	Avg.[4]	20mΩ
Max. Leakage Current[5]		0.023mA
Maximum Continuous Current	at ΔT = 15°C	3.4A
	at ΔT = 40°C	5.6A
Maximum Peak Current, Non-repetitive[6]	at 65°C	10.3A
	at 85°C	8.8A
Max. Stored Energy (E_{max}) at V_R[7]	at 65°C	10.1mWh
	at 85°C	7.3mWh
Usable Specific Power[7]	at 65°C	9.1kW/kg
	at 85°C	6.6kW/kg
Impedance Match / Specific Power[7]	at 65°C	19.0kW/kg
	at 85°C	13.8kW/kg
Max. Gravimetric Specific Energy[7]		3.2Wh/kg

Temperature	
Operating Temperature Range	-40 ~ 65°C (up to 85°C with de-rated voltage) (ΔCAP<5% and ΔESR<200% of initial value measured at 25°C, with linear voltage de-rating to 2.3V @ 85°C)
Storage Temperature Range	-40 ~ 70°C (storage without charge)

Life		
Endurance[8,9]	at 65°C, 2.7V	1,500 hours
	at 85°C, 2.3V	1,000 hours
Room Temperature (at V_R and 25°C)[8]	10 years	
Cycle Life (at 25°C)[8]	500,000 cycles (Cycled from V_R to 1/2V_R using 100mA/F const. current with 10sec rest between charge and discharge steps)	
Shelf Life	2 years (Stored without charge at or under 70°C and under 40% RH)	

Safety & Certification	
RoHS	Compliant
REACH	Compliant
UL	Complies to 810A, Certificate No.: BBBG2.MH46340

Copyright © 2014 Nesscap Co., Ltd. All Rights Reserved

THERMAL

Characteristics	ESHSR-0010C0-002R7
Typical Thermal Resistance, R_{th} (Housing)	42°C/W
Typical Thermal Capacitance, C_{th}	2.7J/°C
Cont. Current to ΔT = 15°C	3.4A
Cont. Current to ΔT = 40°C	5.6A

PHYSICAL

Drawing

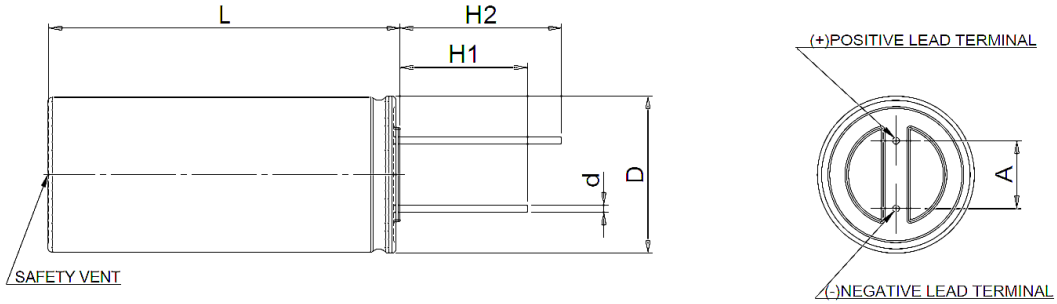

See Note on Mounting[10]

Dimensions	ESHSR-0010C0-002R7
D (+0.5)	10 mm
L (+1.5)	30 mm
H1 (Min.)	15 mm
H2 (Min.)	19 mm
d (±0.05)	0.6 mm
A (±0.5)	5.0 mm
Nominal Weight	3.2 g

Copyright © 2014 Nesscap Co., Ltd. All Rights Reserved

NOTE

1. Surge Voltage
> Absolute maximum voltage, not repeated and for no longer than 1 second.

2. Rated Capacitance
> Constant current charge with 10mA/F to V_R
> Constant voltage charge at V_R for 5min
> Constant current discharge with 10mA/F to 0.1V

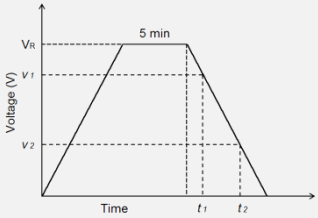

$$C = \frac{I \times (t_2 - t_1)}{v_1 - v_2}$$

Where v_1 is the measurement starting voltage, 0.8 x V_R (V);
v_2 is the measurement end voltage, 0.4 x V_R (V);
t_1 is the time from discharge start to reach v_1 (s);
t_2 is the time from discharge start to reach v_2 (s);
I is the absolute value of the discharging current (A).

3. ESR (Equivalent Series Resistance)
> ESR_{DC}
- Constant current charge to V_R
- Constant voltage charge at V_R for 5min
- Constant current discharge to 0.1V

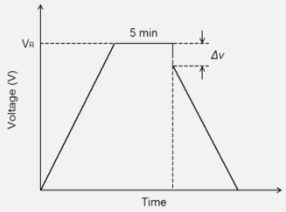

$$R_d = \frac{\Delta v}{I}$$

Where R_d is the ESR_{DC} (Ω);
Δv is the voltage drop for 10ms (V);
I is the discharge current (A).

4. Average (or Typical)
> Percentage spread that may be present in one shipment

5. Leakage Current
> The capacitor is charged to the rated voltage at 25°C.
> Leakage current is the current at 72hours that is required to keep the capacitor charged at the rated voltage

6. Max. Current
> Current for 1sec discharging from rated voltage to half rated voltage under constant current discharging mode.

$$I_{Max.}\ (A) = \frac{\frac{1}{2}V_R}{\Delta t\ /\ C + R_d}$$

Where Δt is the discharge time (sec) and Δt is 1 sec in this case;
C is the capacitance (F);
R_d is the ESR_{DC} (Ω);
V_R is the rated voltage (V).

> Max. Current **should not** be used in normal operation and is only provided as a reference value.

7. Energy & Power
> Max. Stored Energy at V_R = $\frac{\frac{1}{2}CV_R^2}{3600}$

Where C is the capacitance (F);
V_R is the rated voltage (V).

> Usable Specific Power, IEC 62391-2 (W/kg) = $\frac{0.12 \cdot V^2}{ESR_{DC} \cdot Mass}$

> Impedance Match Specific Power (W/kg) = $\frac{0.25 \cdot V^2}{ESR_{DC} \cdot Mass}$

> Gravimetric Specific Energy (Wh/kg) = $\frac{E_{Max.}}{Weight}$

8. Lifetime
> End-of-Life Conditions
- Capacitance: -30% from rated min. value
- ESR: +100% from max. ESR value

9. Endurance
> Conditions
- Temperature: 65 ± 2°C or 85 ± 2°C
- Test duration: 1500 (+48/-0) h
- Applied voltage: V_R ± 0.02V
- Capacitance and ESR measurement are made at 25°C

10. Mounting
> Provide properly spaced holes for mounting according to the cell dimensions as to minimize leads being mechanically stressed.
> Do not place any copper patterns, including the ground pattern, or through-hole via underneath the cell or on the underside of the PCB (if a double-sided PCB is used) as the electrolyte inside the cell, if it should leak, can corrode, short-circuit, the patterns and/or damage other components nearby. Spacing of 1mm or more should be provided in between the footprint of the cell and the nearest copper pattern.
> Protective coating of components nearby on the PCB is recommended to reduce the risk of them being damaged in an event of electrolyte leakage.
> Provide at least 2mm clearance above the safety vent and do not position anything above the safety vent that may be damaged by vent rupture.
> Place cells on the PCB taking into account that the cells may not be completely hermetic during its lifetime. Electrolyte vapor and gases generated during normal use may escape the package during normal operation.
> Soldering recommendation for small and medium size cells available on www.nesscap.com under Support > Download.

The contents of this document are subject to change without notice. Values presented are thought to be accurate at the time of writing. Nesscap does not guarantee that the values are error-free, nor does Nesscap make any other representation, warranty or guarantee that the information is accurate, correct, reliable or current. For more information, you can reach us at one of following contacts

Nesscap Energy Inc.	Nesscap Energy Inc.	Nesscap Co., Ltd.	Nesscap China	Nesscap Energy EASTERN EUROPE	Nesscap Energy GmbH
Suite 3800, Royal Bank Plaza, South Tower, 200 Bay Street, P.O. Box 84, Toronto, Ontario, M5J 2Z4	S24040 Camino Del Avion #A118, Monarch Beach, California, 92629	17, Dongtangiheung-ro 681beon-gil, Giheung-gu, Yongin-si, Gyeonggi-do	Room 1608, Block N, Cangson Building, Chegonmiao, Futian District, Shenzhen City, P.R.C	10A, prospect 60-letiya Oktyabrya Moscow, 117036	Beerengarten 4 D-86938 Schondorf
CANADA	USA	REPUBLIC OF KOREA	CHINA	RUSSIA	GERMANY

marketing@nesscap.com
info@nesscap-energy.de

Copyright © 2014 Nesscap Co., Ltd. All Rights Reserved